



Fork type bare terminal Y

Series: Y-type

Product Material: Terminal made of high quality copper, good conductivity.

Features: The use of high-quality matte plating, greatly extended anti-rust time, no sharp parts; supporting the daily terminal crimping tools can be pressed wire, beautiful wiring,

International Certification: EU RoHS environmental certification.

Product Features: Excellent quality, cracked loose open after compression, -40 degrees heat to 85 degrees normal use.

How to use: peel the wire skin, into the terminal after the brass

22

Specification

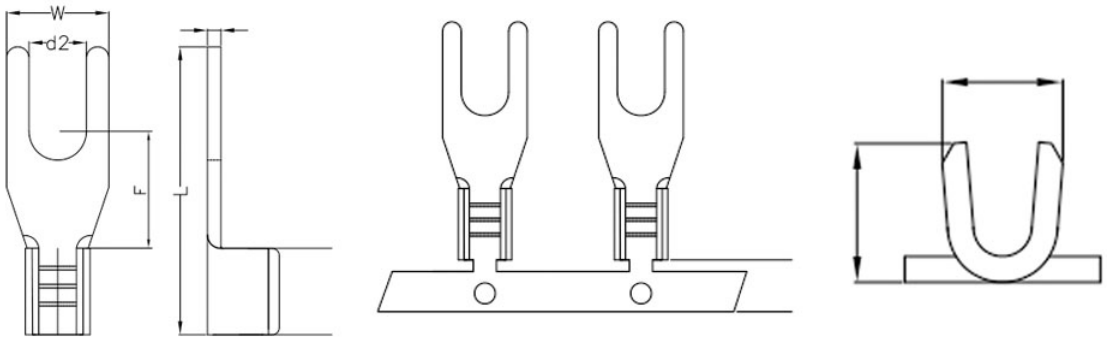

Item No.	USA screw	D2	DIMENSION (mm)		
			W	F	L
Y1.25-3 connection	#4	3.2	5.7	6.5	16
YS1.25-3.5 connection	#6	3.7	5.7	6.5	16
YL1.25-3.5 connection	#6	3.7	6.6	6.5	16
YS1.25-4 connection	#8	4.3	8	6.5	16
YM1.25-4 connection	#8	4.3	6.6	6.5	16
YL1.25-4 connection	#8	4.3	8	6.5	16
YS1.25-5 connection	#10	5.3	8	6.5	16
YL1.25-5 connection	#10	5.3	9.8	6.5	16
YS1.25-6 connection	1/4	6.4	9.8	6.5	16
YL1.25-6 connection	1/4	6.4	11.6	11	22
Y2-3 connection	#4	3.2	5.7	6.5	16
YS2-3.5 connection	#6	3.7	5.7	6.5	16
YL2-3.5 connection	#6	3.7	6	6.5	16
YS2-4 connection	#8	4.3	6.4	6.5	16
YM2-4 connection	#8	4.3	7.2	6.5	16
YL2-4 connection	#8	4.3	8.1	6.5	16
YS2-5 connection	#10	5.3	8.1	6.5	16
YL2-5 connection	#10	5.3	9.5	6.5	16
YS2-6 connection	1/4	6.4	9.5	6.5	16

YL2-6 connection	1/4	6.4	12	11	22
Y3.5-3 connection	#4	3.2	5.7	7	18.3
YS3.5-4 connection	#8	4.3	8	7	18.3
Y3.5-4 connection	#10	5.3	8	7	18.3
Y3.5-5 connection	1/4	6.4	12	12.1	21.5
Y3.5-6 connection	#6	3.7	7.2	7.5	18.2
YS5.5-4 connection	#8	4.3	8.3	7.5	19.5
YL5.5-4 connection	#8	4.3	9	7.5	19.5
Y5.5-5 connection	#10	5.3	9	7.5	19.5
YS5.5-6 connection	1/4	6.4	9	7.5	19.5
YL5.5-6 connection	1/4	6.4	12	12	25.5
Y5.5-8 connection	5/16	8.4	14	11.5	24.5

Product Show

